Spare parts list

	Part number	Model	Series
KL/TL	2051478224	M25-21500-KL ATEX	C
	2051478234	M25-4700-KL ATEX	C
	2051478254	M25-2100-KL ATEX	C
	2051478264	M25-1040-KL ATEX	C
	2051478274	M25-770-KL ATEX	C
	2051478284	M25-480-KL ATEX	C
	2051481724	M25-180-KL ATEX	C
	2051478294	M25-21500-TL ATEX	C
	2051478304	M25-4700-TL ATEX	C
	2051478314	M25-3550-TL ATEX	C
	2051478324	M25-2100-TL ATEX	C
	2051478334	M25-1040-TL ATEX	C
	2051478344	M25-770-TL ATEX	C
	2051478354	M25-480-TL ATEX	C
	2051478364	MR25-13100-KL ATEX	C
	2051478374	MR25-2850-KL ATEX	C
	2051478384	MR25-2100-KL ATEX	C
	2051478394	MR25-1300-KL ATEX	C
	2051478404	MR25-640-KL ATEX	C
	2051478414	MR25-480-KL ATEX	C
	2051478424	MR25-290-KL ATEX	C
	2051481324	MR25-100-KL ATEX	C
KSL	2051478434	M25-19500-KSL ATEX	C
	2051478444	M25-4700-KSL ATEX	C
	2051478464	M25-2100-KSL ATEX	C
	2051478484	M25-770-KSL ATEX	C
	2051478514	MR25-2800-KSL ATEX	C
	2051478534	MR25-1300-KSL ATEX	C
	2051478544	MR25-640-KSL ATEX	C
	2051478554	MR25-480-KSL ATEX	C
	2051478564	MR25-290-KSL ATEX	C

Table of contents

- Gearbox 3
- Motor 24
- Control top complete 32
- Mounting flange 33
- Front nut 38
- Mounting foot 39
- Service kit 41
- Small parts kit 43

GEARBOX

Gearbox items

■ M25-21500-KL ATEX

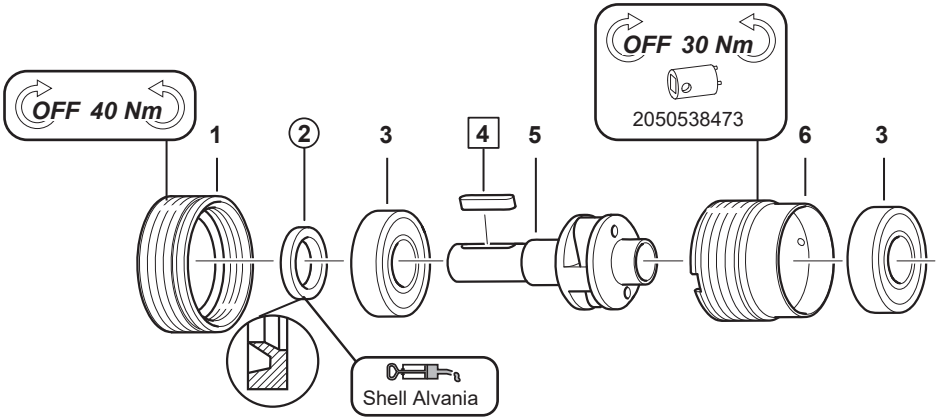

□ = Included in small parts kit

○ = Included in service kit

Item	Part number	Description	Qty
1	2050557783	Front Part	1
2	-	Seal Ring Kl/Tl	1
3	2050535963	Ball Bearing	2
4	-	Key	1
5	2050537563	Planetary Gear, Compl.	1
6	2050536653	Gear Rim	1
-	2050538473	Face Spanner	1

Gearbox items

■ M25-2100-KL ATEX

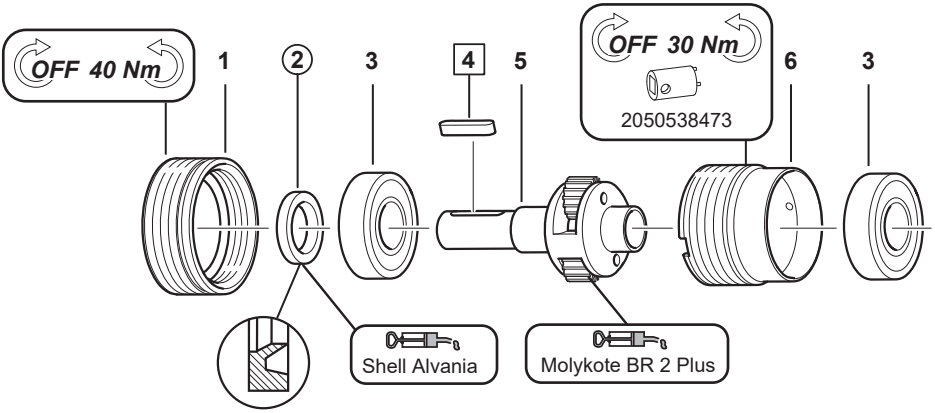

□ = Included in small parts kit

○ = Included in service kit

Item	Part number	Description	Qty
1	2050557783	Front Part	1
2	-	Seal Ring KI/TI	1
3	2050535963	Ball Bearing	2
4	-	Key	1
5	2050537583	Planetary Gear, Compl. (M25-2100-KL ATEX)	1
6	2050536653	Gear Rim	1
-	2050538473	Face Spanner	1

Gearbox items

■ M25-4700-KL ATEX

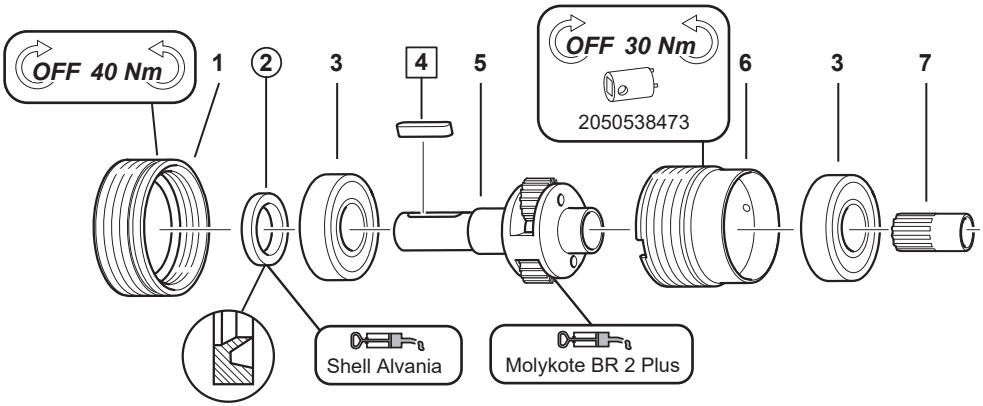

□ = Included in small parts kit

○ = Included in service kit

Item	Part number	Description	Qty
1	2050557783	Front Part	1
2	-	Seal Ring Kl/Tl	1
3	2050535963	Ball Bearing	2
4	-	Key	1
5	2050537573	Planetary Gear, Compl.	1
6	2050536653	Gear Rim	1
7	2050536783	Gear Wheel	1
-	2050538473	Face Spanner	1

Gearbox items

■ M25-1040-KL ATEX

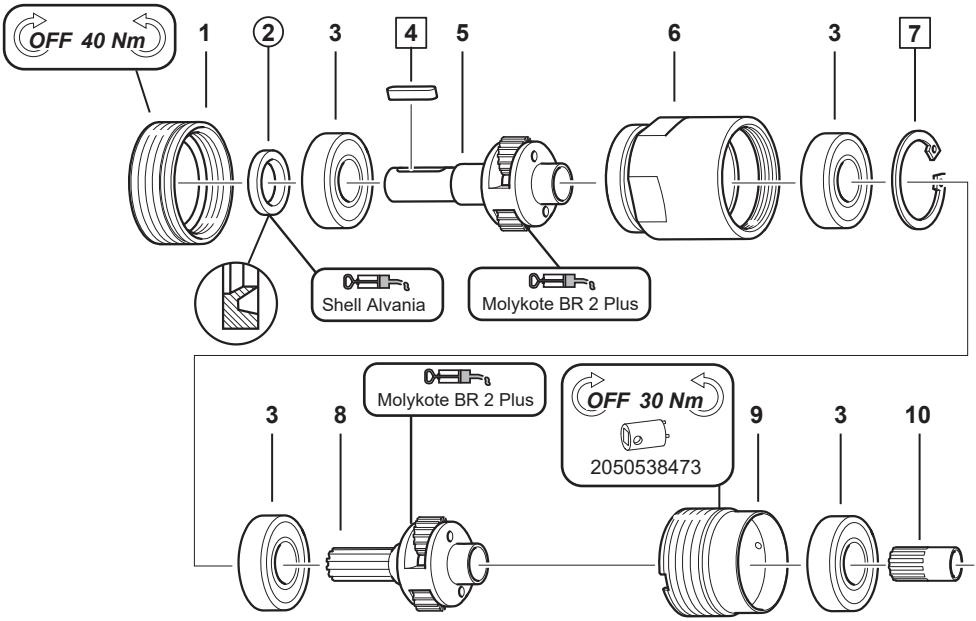

□ = Included in small parts kit

○ = Included in service kit

Item	Part number	Description	Qty
1	2050557783	Front Part	1
2	-	Seal Ring KI/TI	1
3	2050535963	Ball Bearing	4
4	-	Key	1
5	2050537573	Planetary Gear, Compl.	1
6	2050536663	Gear Rim	1
7	-	Circlip	1
8	2050537533	Planetary Gear, Compl.	1
9	2050536653	Gear Rim	1
10	2050536783	Gear Wheel	1
-	2050538473	Face Spanner	1

Gearbox items

■ M25-770-KL ATEX
■ M25-480-KL ATEX

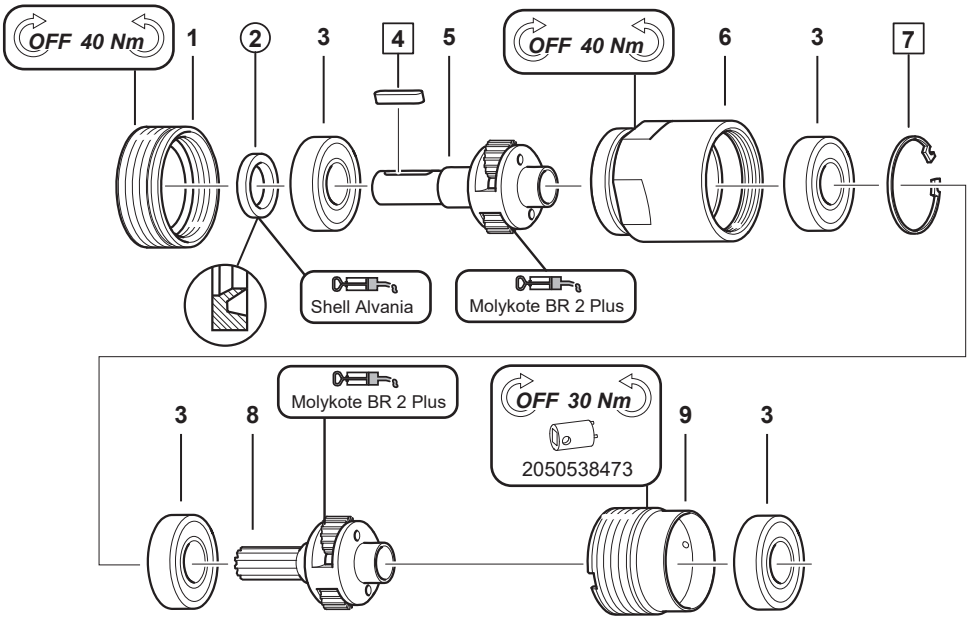

□ = Included in small parts kit

○ = Included in service kit

Item	Part number	Description	Qty
1	2050557783	Front Part	1
2	-	Seal Ring Kl/Tl	1
3	2050535963	Ball Bearing	4
4	-	Key	1
5	2050537573	Planetary Gear, Compl.	1
6	2050536663	Gear Rim	1
7	-	Circlip	1
8	2050537643	Planetary Gear, Compl. (M25-770-KL ATEX)	1
8	2050537523	Planetary Gear, Compl. (M25-480-KL ATEX)	1
9	2050536653	Gear Rim	1
-	2050538473	Face Spanner	1

Gearbox items

■ M25-180-KL ATEX
■ MR25-100-KL ATEX

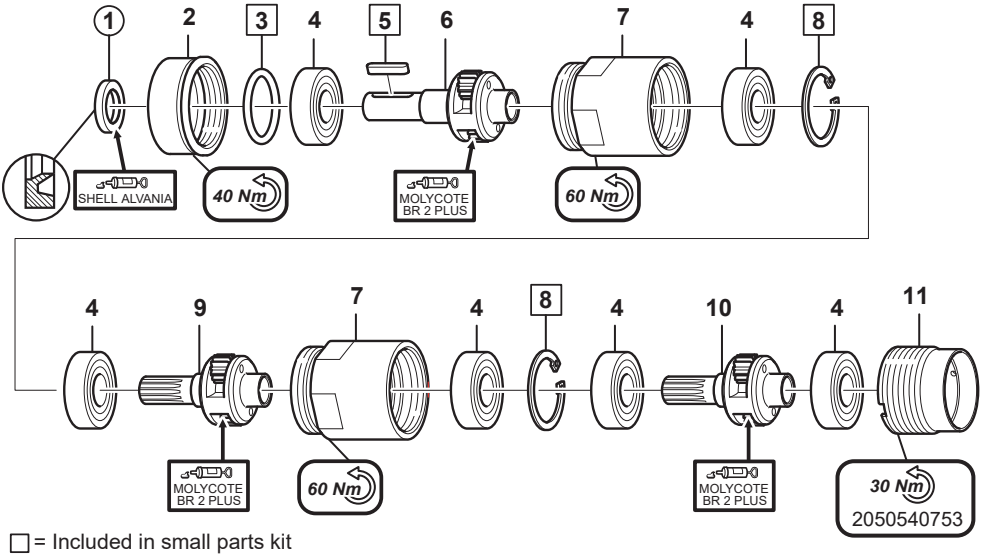

□ = Included in small parts kit

○ = Included in service kit

Item	Part number	Description	Qty
1	-	Seal Ring Kl/Tl	1
2	2050536543	Front Part	1
3	-	O-Ring	1
4	2050535963	Ball Bearing	6
5	-	Key	1
6	2050537573	Planetary Gear, Compl.	1
7	2050536663	Gear Rim	2
8	-	Circlip	2
9	2050537533	Planetary Gear, Compl.	1
10	2050537643	Planetary Gear, Compl.	1
11	2050536653	Gear Rim	1
-	2050538473	Face Spanner	1

Gearbox items

M25-21500-TL ATEX

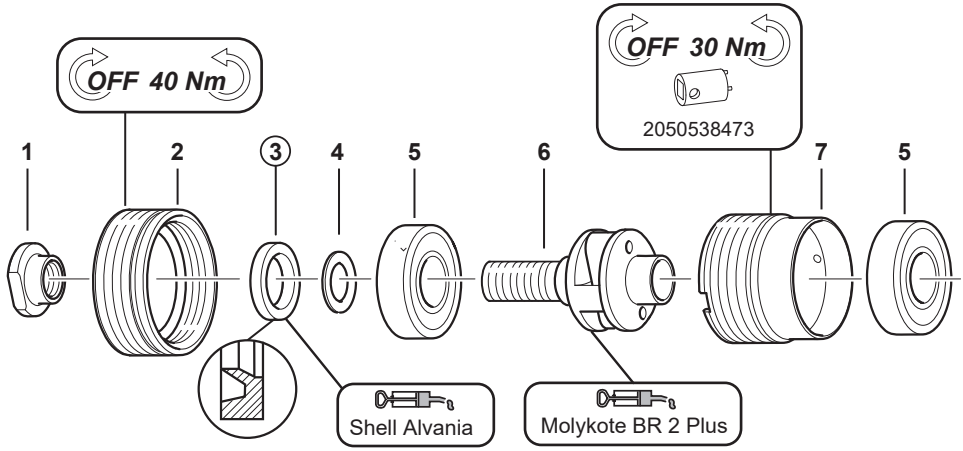

◯ = Included in service kit

Item	Part number	Description	Qty
1	2050538133	Spacer	1
2	2050557783	Front Part	1
3	-	Seal Ring Kl/Tl	1
4	2050538193	Washer	1
5	2050535963	Ball Bearing	2
6	2050540373	Planetary Gear, Compl.	1
7	2050536653	Gear Rim	1
-	2050538473	Face Spanner	1

Gearbox items

- M25-3550-TL ATEX
- M25-2100-TL ATEX

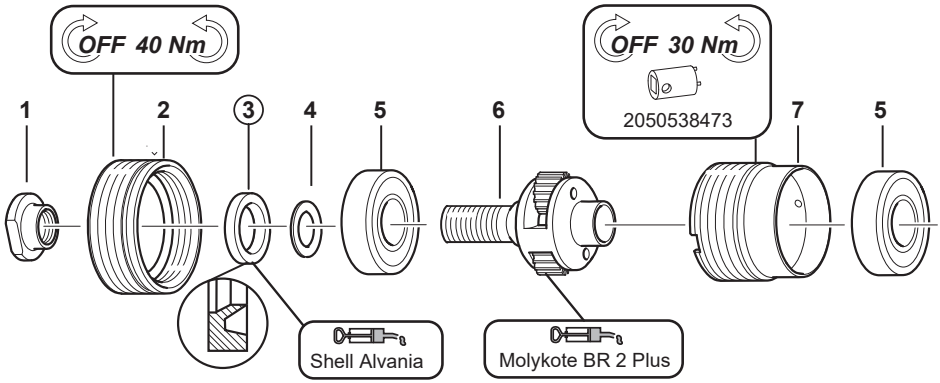

◯ = Included in service kit

Item	Part number	Description	Qty
1	2050538133	Spacer	1
2	2050557783	Front Part	1
3	-	Seal Ring Kl/Tl	1
4	2050538193	Washer	1
5	2050535963	Ball Bearing	2
6	2050537653	Planetary Gear, Compl. (M25-3550-Tl Atex)	1
6	2050537553	Planetary Gear, Compl. (M25-2100-Tl Atex)	1
7	2050536653	Gear Rim	1
-	2050538473	Face Spanner	1

Gearbox items

■ M25-4700-TL ATEX

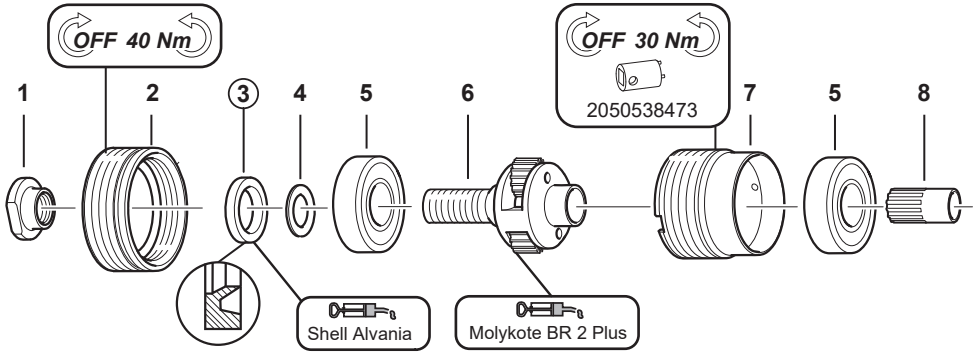

◯ = Included in service kit

Item	Part number	Description	Qty
1	2050538133	Spacer	1
2	2050557783	Front Part	1
3	-	Seal Ring Kl/Tl	1
4	2050538193	Washer	1
5	2050535963	Ball Bearing	2
6	2050537543	Planetary Gear, Compl.	1
7	2050536653	Gear Rim	1
8	2050536783	Gear Wheel	1
-	2050538473	Face Spanner	1

Gearbox items

■ M25-1040-TL ATEX

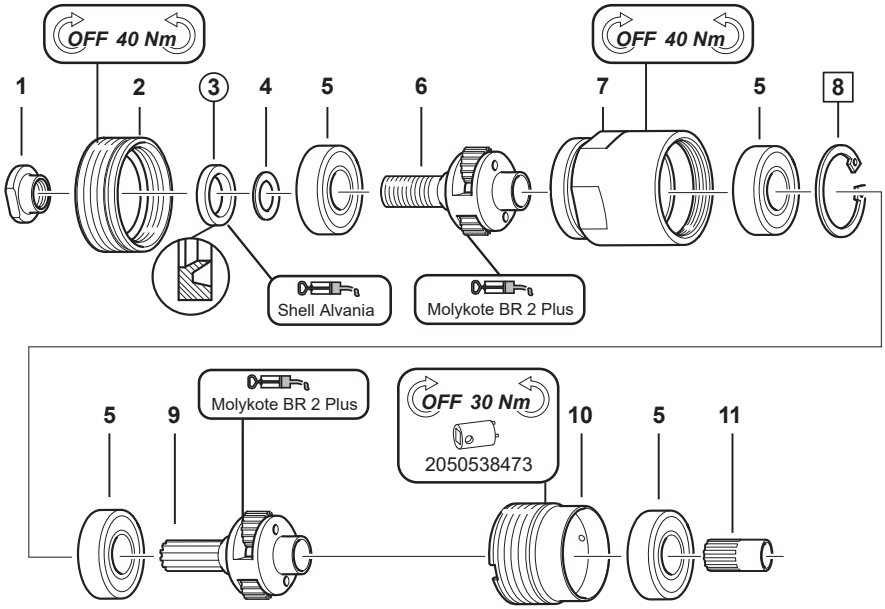

□ = Included in small parts kit

○ = Included in service kit

Item	Part number	Description	Qty
1	2050538133	Spacer	1
2	2050557783	Front Part	1
3	-	Seal Ring KI/TI	1
4	2050538193	Washer	1
5	2050535963	Ball Bearing	4
6	2050537543	Planetary Gear, Compl.	1
7	2050536663	Gear Rim	1
8	-	Circlip	1
9	2050537533	Planetary Gear, Compl.	1
10	2050536653	Gear Rim	1
11	2050536783	Gear Wheel	1
-	2050538473	Face Spanner	1

Gearbox items

■ M25-770-TL ATEX
■ M25-480-TL ATEX

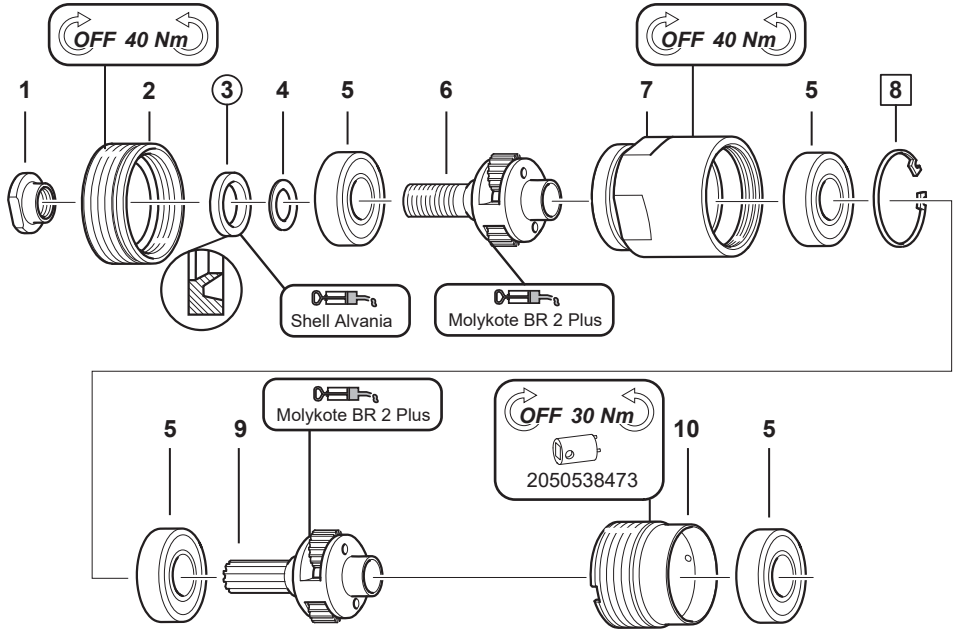

□ = Included in small parts kit

○ = Included in service kit

Item	Part number	Description	Qty
1	2050538133	Spacer	1
2	2050557783	Front Part	1
3	-	Seal Ring Kl/Tl	1
4	2050538193	Washer	1
5	2050535963	Ball Bearing	4
6	2050537543	Planetary Gear, Compl.	1
7	2050536663	Gear Rim	1
8	-	Circlip	1
9	2050537643	Planetary Gear, Compl. (M25-770-TL ATEX)	1
9	2050537523	Planetary Gear, Compl. (M25-480-TL ATEX)	1
10	2050536653	Gear Rim	1
-	2050538473	Face Spanner	1

Gearbox items

■ MR25-13100-KL ATEX

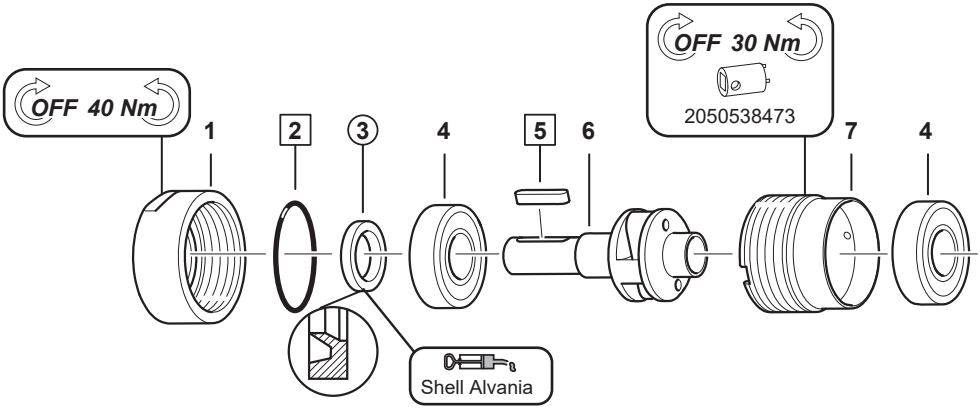

□ = Included in small parts kit

○ = Included in service kit

Item	Part number	Description	Qty
1	2050536543	Front Part	1
2	-	Seal Ring KI/TI	1
3	-	Seal Ring	1
4	2050535963	Ball Bearing	2
5	-	Key	1
6	2050537563	Planetary Gear, Compl.	1
7	2050536653	Gear Rim	1
-	2050538473	Face Spanner	1

Gearbox items

■ MR25-2100-KL ATEX
■ MR25-1300-KL ATEX

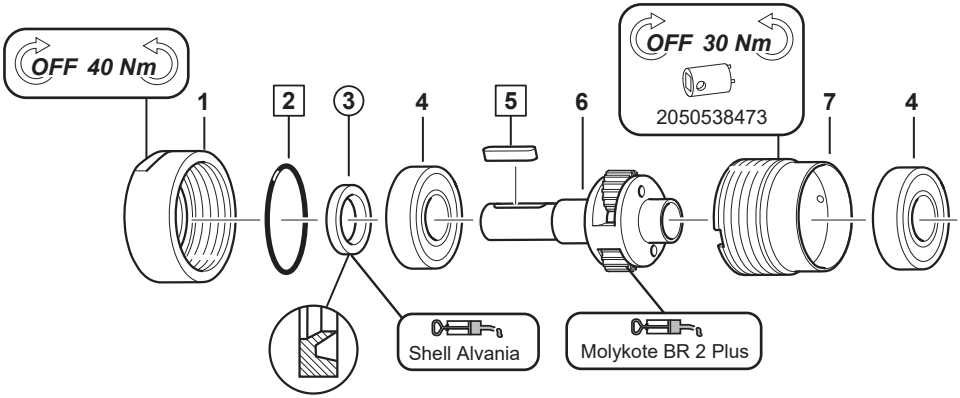

□ = Included in small parts kit

○ = Included in service kit

Item	Part number	Description	Qty
1	2050536543	Front Part	1
2	-	Seal Ring Kl/Tl	1
3	-	Seal Ring	1
4	2050535963	Ball Bearing	2
5	-	Key	1
6	2050537663	Planetary Gear, Compl. (MR25-2100-KL ATEX)	1
6	2050537583	Planetary Gear, Compl. (MR25-1300-KL ATEX)	1
7	2050536653	Gear Rim	1
-	2050538473	Face Spanner	1

Gearbox items

■ MR25-2850-KL ATEX

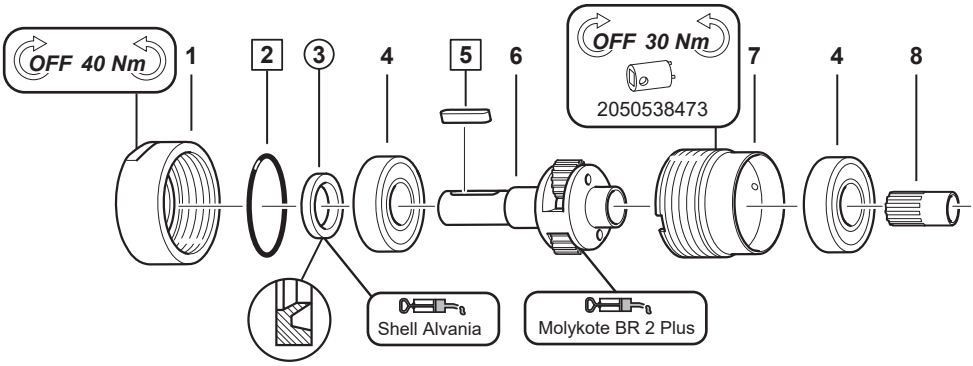

□ = Included in small parts kit

○ = Included in service kit

Item	Part number	Description	Qty
1	2050536543	Front Part	1
2	-	O-Ring	1
3	-	Seal Ring Kl/Tl	1
4	2050535963	Ball Bearing	2
5	-	Key	1
6	2050537573	Planetary Gear, Compl.	1
7	2050536653	Gear Rim	1
8	2050536783	Gear Wheel	1
-	2050538473	Face Spanner	1

Gearbox items

■ MR25-640-KL ATEX

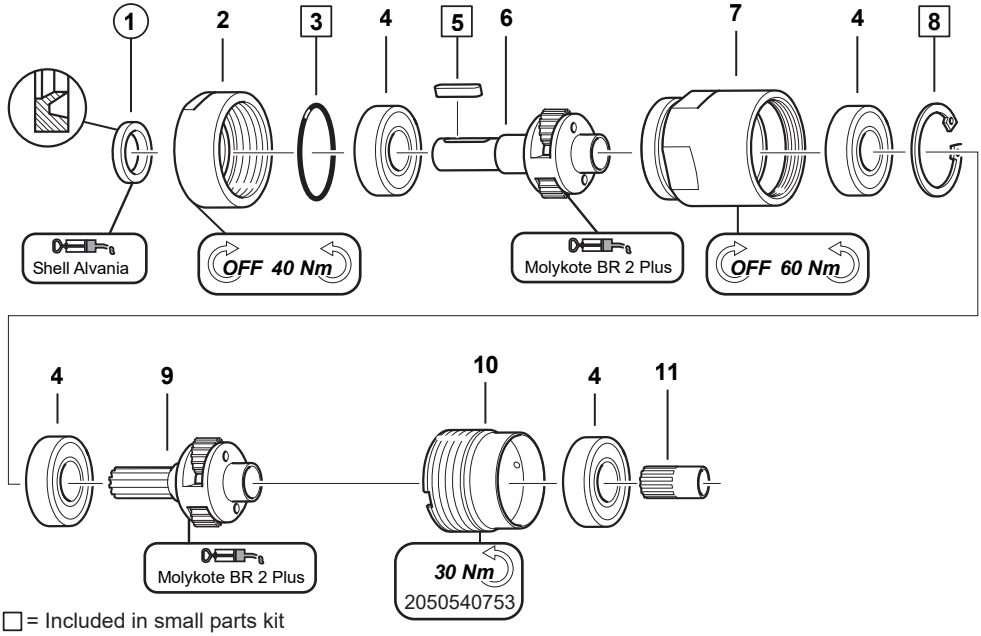

□ = Included in small parts kit

○ = Included in service kit

Item	Part number	Description	Qty
1	-	Seal Ring Kl/Tl	1
2	2050536543	Front Part	1
3	-	O-Ring	1
4	2050535963	Ball Bearing	4
5	-	Key	1
6	2050537573	Planetary Gear, Compl.	1
7	2050536663	Gear Rim	1
8	-	Circlip	1
9	2050537533	Planetary Gear, Compl.	1
10	2050536653	Gear Rim	1
11	2050536783	Gear Wheel	1
-	2050538473	Face Spanner	1

Gearbox items

■ MR25-480-KL ATEX
■ MR25-290-KL ATEX

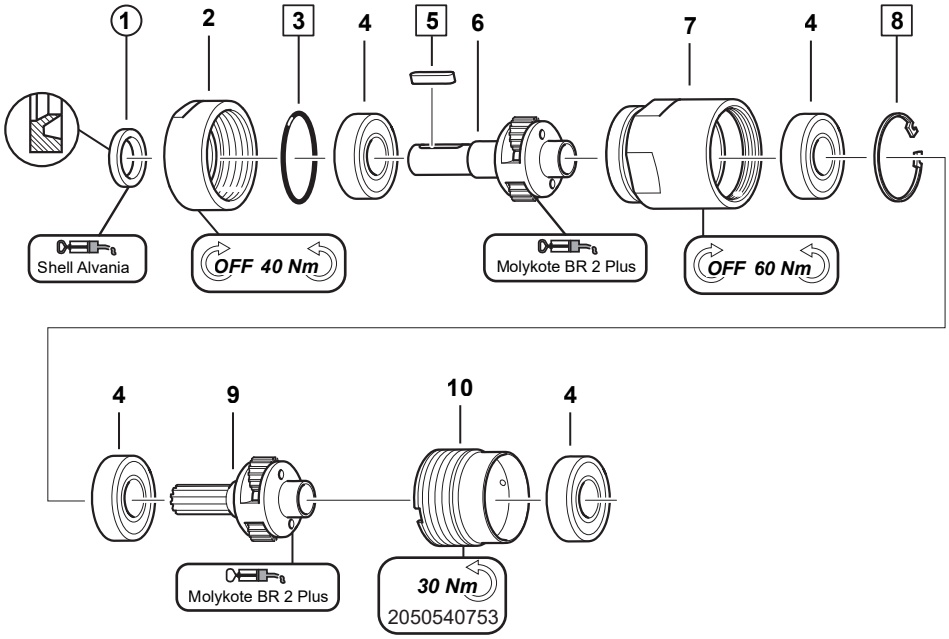

□ = Included in small parts kit

○ = Included in service kit

Item	Part number	Description	Qty
1	-	Seal Ring Kl/Tl	1
2	2050536543	Front Part	1
3	-	O-Ring	1
4	2050535963	Ball Bearing	4
5	-	Key	1
6	2050537573	Planetary Gear, Compl.	1
7	2050536663	Gear Rim	1
8	-	Circlip	1
9	2050537643	Planetary Gear, Compl. (MR25-480-KL ATEX)	1
9	2050537523	Planetary Gear, Compl. (MR25-290-KL ATEX)	1
10	2050536653	Gear Rim	1
-	2050538473	Face Spanner	1

Gearbox items

■ M25-19500-KSL ATEX

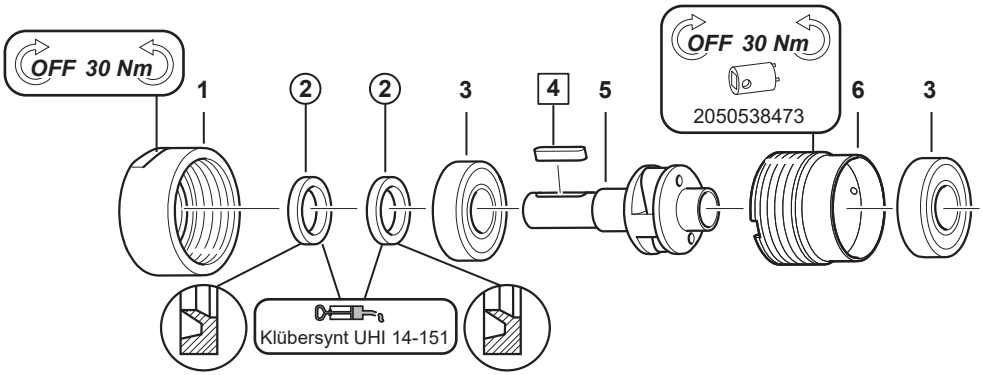

□ = Included in small parts kit

○ = Included in service kit

Item	Part number	Description	Qty
1	2050540463	Front Part	1
2	-	Seal Ring Ksl	2
3	2050535963	Ball Bearing	2
4	-	Key	1
5	2050537773	Planetary Gear, Compl.	1
6	2050536653	Gear Rim	1
-	2050538473	Face Spanner	1

Gearbox items

■ M25-2100-KSL ATEX ■ MR25-1300-KSL ATEX

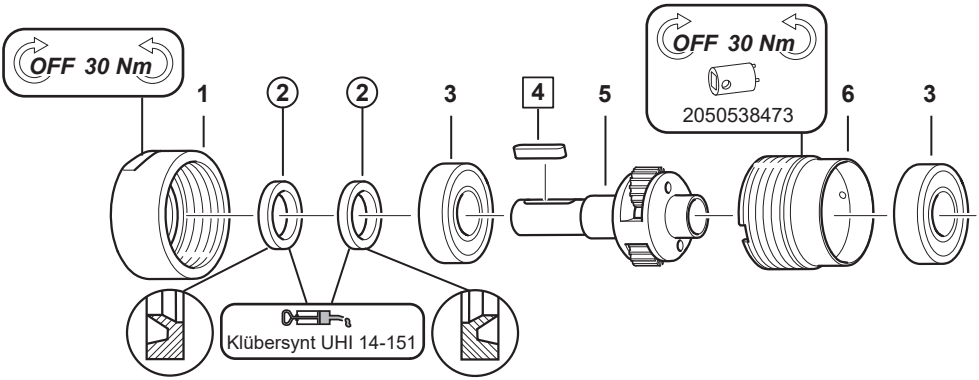

□ = Included in small parts kit

○ = Included in service kit

Item	Part number	Description	Qty
1	2050540463	Front Part	1
2	-	Seal Ring Ksl	2
3	2050535963	Ball Bearing	2
4	-	Key	1
5	2050537803	Planetary Gear, Compl. (M25-2100-KSL ATEX & MR25-1300-KSL ATEX)	1
6	2050536653	Gear Rim	1
-	2050538473	Face Spanner	1

Gearbox items

- M25-4700-KSL ATEX
- MR25-2800-KSL ATEX

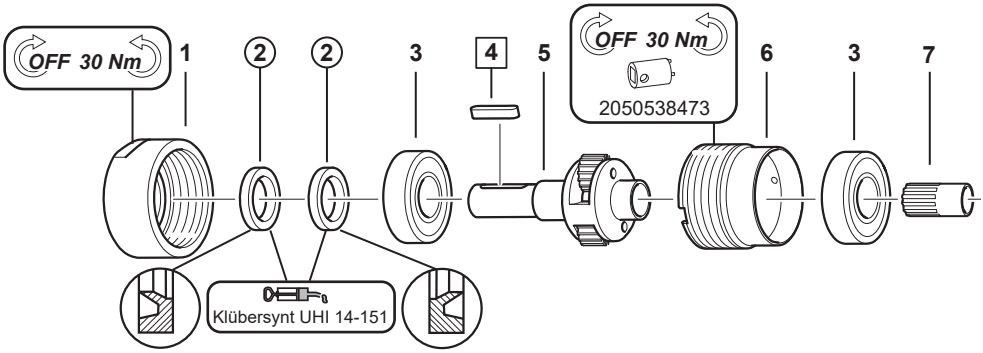

□ = Included in small parts kit

○ = Included in service kit

Item	Part number	Description	Qty
1	2050540463	Front Part	1
2	-	Seal Ring Ksl	2
3	2050535963	Ball Bearing	2
4	-	Key	1
5	2050537783	Planetary Gear, Compl.	1
6	2050536653	Gear Rim	1
7	2050536783	Gear Wheel	1
-	2050538473	Face Spanner	1

Gearbox items

■ MR25-640-KSL ATEX

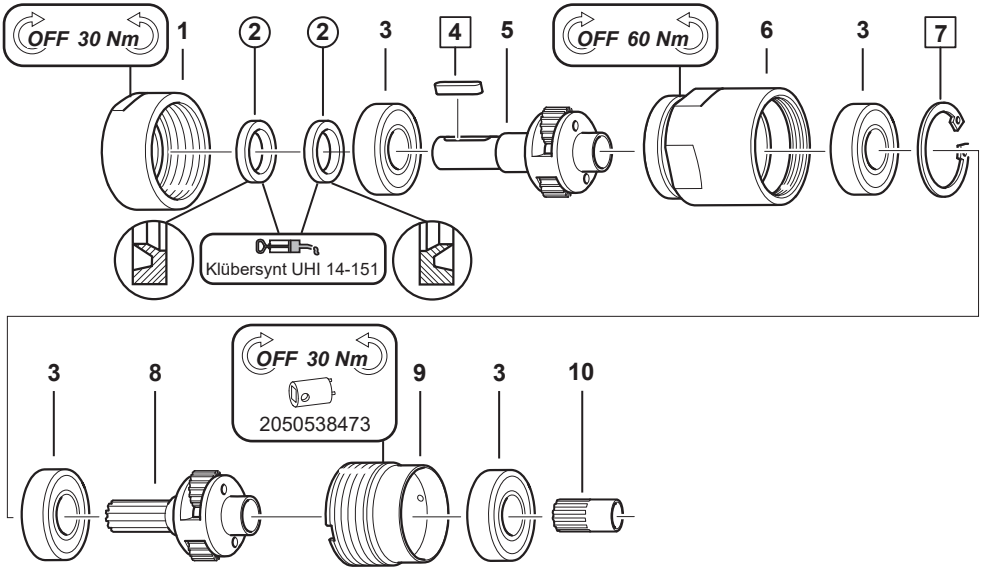

□ = Included in small parts kit

○ = Included in service kit

Item	Part number	Description	Qty
1	2050540463	Front Part	1
2	2050538063	Seal Ring Ksl	2
3	2050535963	Ball Bearing	4
4	2050536923	Key	1
5	2050537783	Planetary Gear, Compl.	1
6	2050536683	Gear Rim	1
7	450083	Circlip	1
8	2050537533	Planetary Gear, Compl.	1
9	2050536653	Gear Rim	1
10	2050536783	Gear Wheel	1
-	2050538473	Face Spanner	1

Gearbox items

■ M25-770-KSL ATEX

■ MR25-480-KSL ATEX

■ MR25-290-KSL ATEX

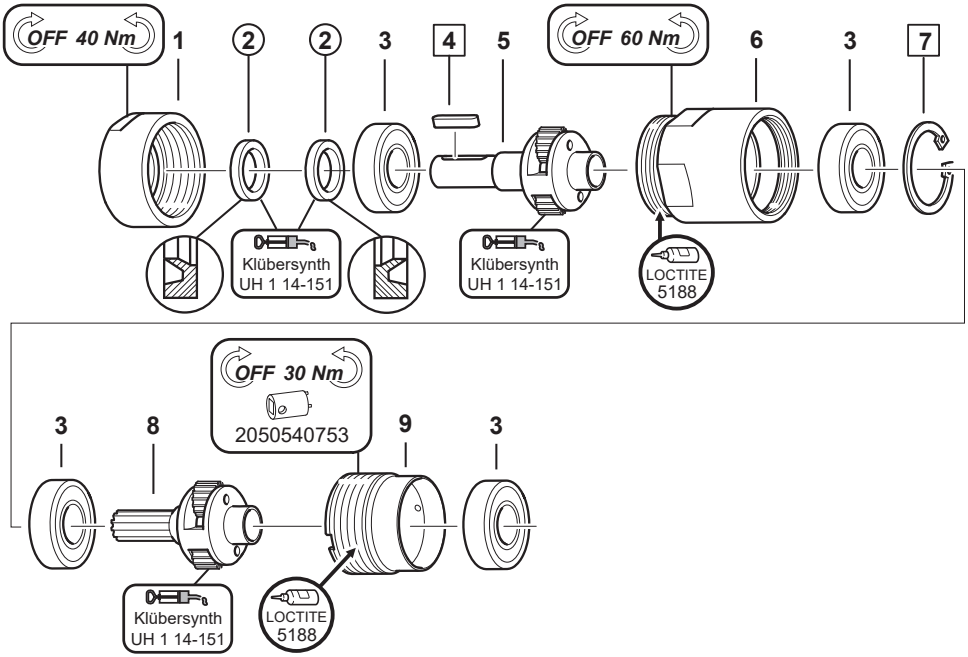

□ = Included in small parts kit

○ = Included in service kit

Item	Part number	Description	Qty
1	2050540463	Front Part	1
2	2050538063	Seal Ring Ksl	2
3	2050535963	Ball Bearing	4
4	2050536923	Key	1
5	2050537783	Planetary Gear, Compl.	1
6	2050536663	Gear Rim	1
7	450083	Circlip	1
8	2050537643	Planetary Gear, Compl. (M25-770-KSL ATEX & MR25-480-KSL ATEX)	1
8	2050537523	Planetary Gear, Compl. (MR25-290-KSL ATEX)	1
9	2050536653	Gear Rim	1
-	2050538473	Face Spanner	1

MOTOR

Motor items

- M25-21500-KL ATEX
- M25-4700-KL ATEX
- M25-2100-KL ATEX
- M25-1040-KL ATEX
- M25-480-KL ATEX
- M25-21500-TL ATEX
- M25-4700-TL ATEX
- M25-2100-TL ATEX
- M25-1040-TL ATEX
- M25-480-TL ATEX

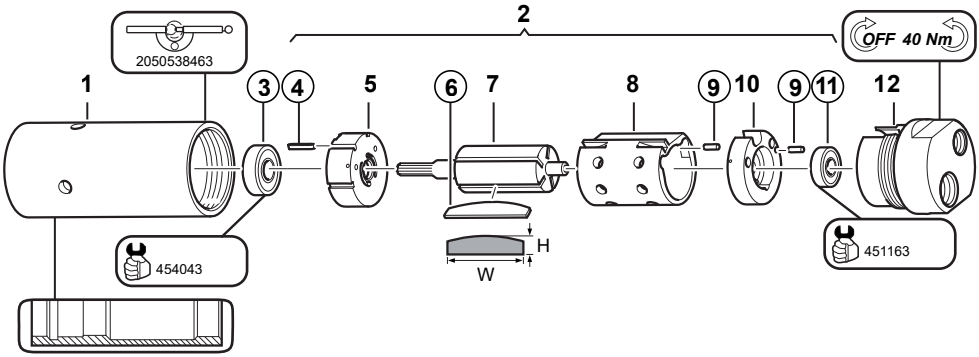

◯ = Included in service kit

Item	Part number	Description	Qty
1	2050536043	Casing	1
2	**2050537083**	**Motor, Compl.**	**1**
3	-	Ball Bearing	1
4	-	Key	1
5	2050536273	End Plate	1
6	-	Rotor Blade Kit	1
7	2050537873	Rotor	1
8	2050536163	Cylinder	1
9	-	Pin	2
10	2050536283	End Plate	1
11	-	Ball Bearing	1
12	2050535793	Back Head	1
-	451163	Mandrel	1
-	454043	Mandrel	1
-	2050538463	Wrench	1

Motor items

- M25-770-KL ATEX
- M25-180-KL ATEX
- M25-3550-TL ATEX
- M25-770-TL ATEX

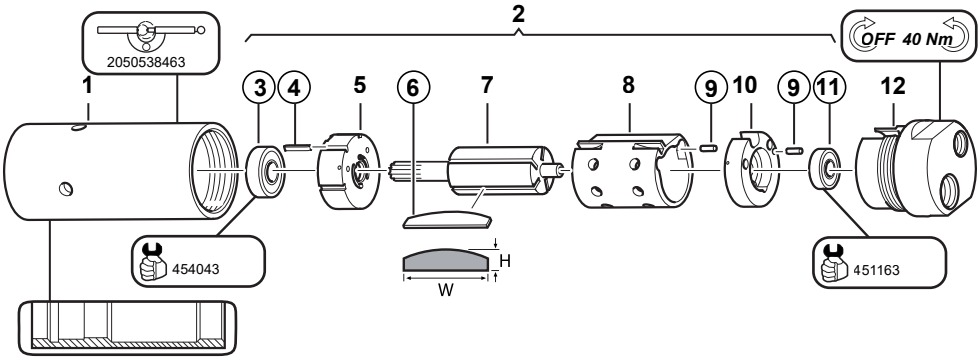

◯ = Included in service kit

Item		Part number	Description	Qty
1		2050536043	Casing	1
2		**2050537093**	**Motor, Compl.**	**1**
	3	-	Ball Bearing	1
	4	-	Key	1
	5	2050536273	End Plate	1
	6	-	Rotor Blade Kit	1
	7	2050537883	Rotor	1
	8	2050536163	Cylinder	1
	9	-	Pin	2
	10	2050536283	End Plate	1
	11	-	Ball Bearing	1
12		2050535793	Back Head	1
-		451163	Mandrel	1
-		454043	Mandrel	1
-		2050538463	Wrench	1

Motor items

- MR25-13100-KL ATEX
- MR25-2850-KL ATEX
- MR25-1300-KL ATEX
- MR25-640-KL ATEX
- MR25-290-KL ATEX

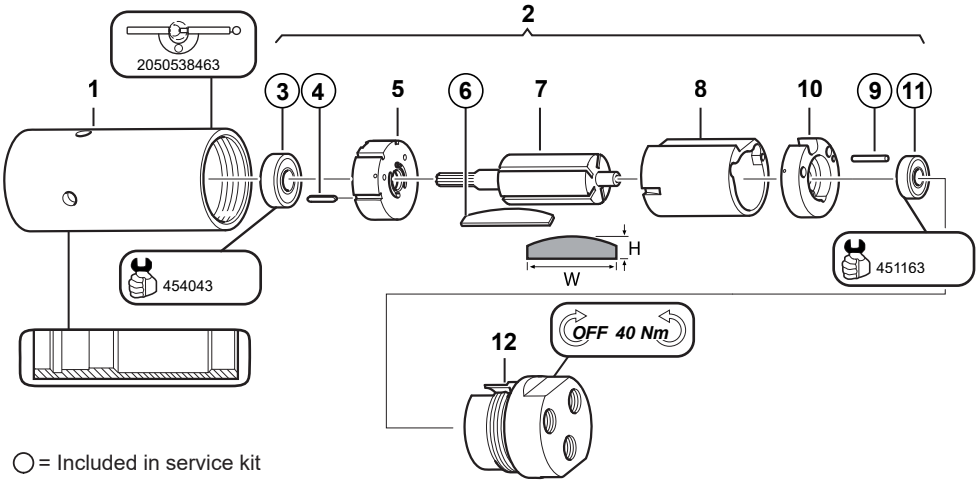

◯ = Included in service kit

Item	Part number	Description	Qty
1	2050536043	Casing	1
2	**2050537233**	**Motor, Compl.**	**1**
3	-	Ball Bearing	1
4	-	Key	1
5	2050536273	End Plate	1
6	-	Rotor Blade Kit	1
7	2050537873	Rotor	1
8	2050536173	Cylinder	1
9	-	Pin	1
10	2050536283	End Plate	1
11	-	Ball Bearing	1
12	2050535783	Back Head	1
-	451163	Mandrel	1
-	454043	Mandrel	1
-	2050538463	Wrench	1

Motor items

- MR25-2100-KL ATEX
- MR25-480-KL ATEX
- MR25-100-KL ATEX

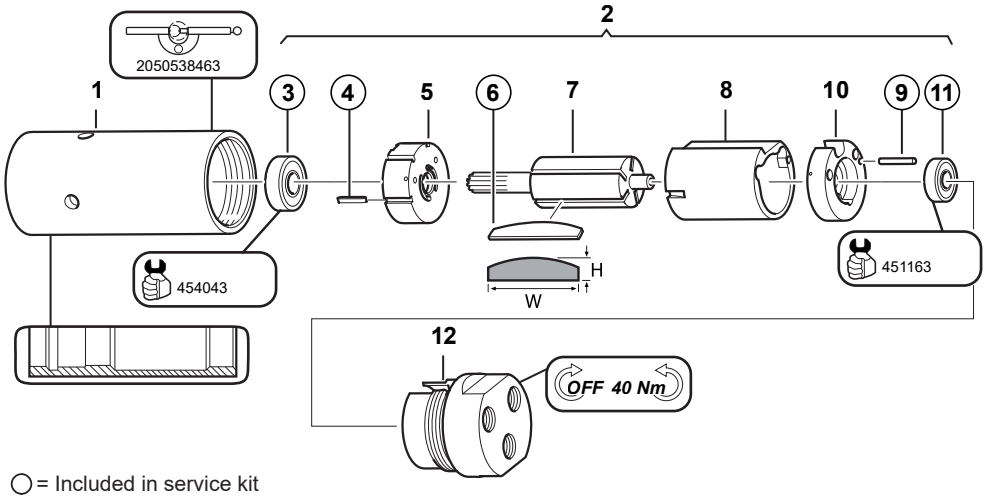

◯ = Included in service kit

Item	Part number	Description	Qty
1	2050536043	Casing	1
2	**2050537103**	**Motor, Compl.**	**1**
3	-	Ball Bearing	1
4	-	Key	1
5	2050536273	End Plate	1
6	-	Rotor Blade Kit	1
7	2050537883	Rotor	1
8	2050536173	Cylinder	1
9	-	Pin	1
10	2050536283	End Plate	1
11	-	Ball Bearing	1
12	2050535783	Back Head	1
-	451163	Mandrel	1
-	454043	Mandrel	1
-	2050538463	Wrench	1

Motor items

- M25-19500-KSL ATEX
- M25-4700-KSL ATEX
- M25-2100-KSL ATEX

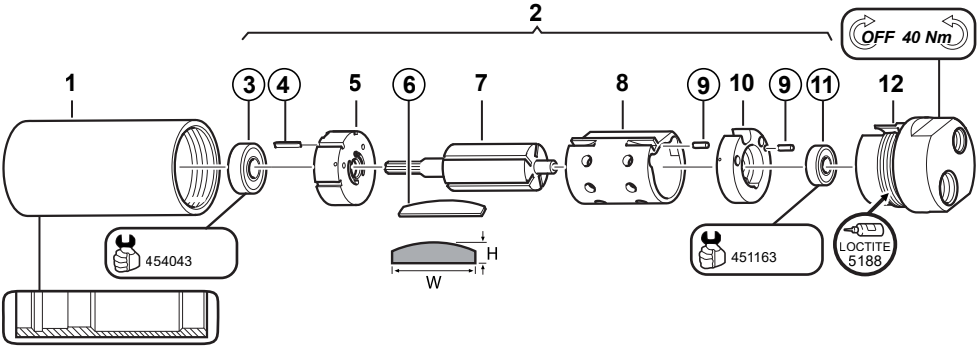

◯ = Included in service kit

Item	Part number	Description	Qty
1	2050536063	Casing	1
2	**2050537083**	**Motor, Compl.**	**1**
3	-	Ball Bearing	1
4	-	Key	1
5	2050536273	End Plate	1
6	-	Rotor Blade Kit	1
7	2050537873	Rotor	1
8	2050536163	Cylinder	1
9	-	Pin	2
10	2050536283	End Plate	1
11	-	Ball Bearing	1
12	2050535853	Back Head	1
-	451163	Mandrel	1
-	454043	Mandrel	1
-	2050538463	Wrench	1

Motor items

M25-770-KSL ATEX

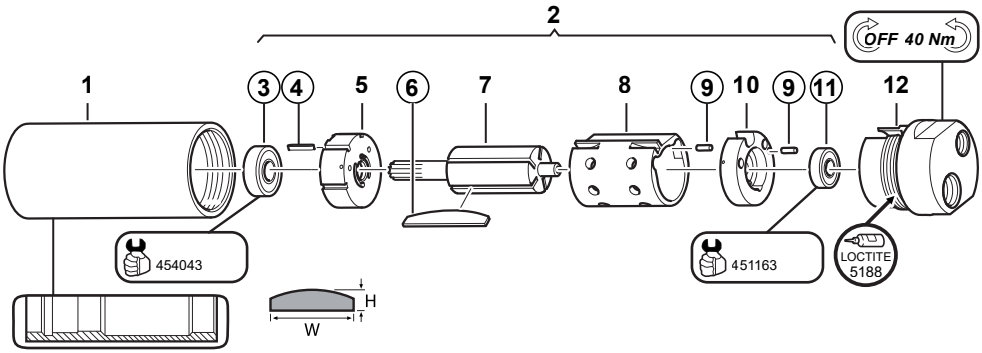

◯ = Included in service kit

Item	Part number	Description	Qty
1	2050536063	Casing	1
2	**2050537093**	**Motor, Compl.**	**1**
3	-	Ball Bearing	1
4	-	Key	1
5	2050536273	End Plate	1
6	-	Rotor Blade Kit	1
7	2050537883	Rotor	1
8	2050536163	Cylinder	1
9	-	Pin	2
10	2050536283	End Plate	1
11	-	Ball Bearing	1
12	2050535853	Back Head	1
-	451163	Mandrel	1
-	454043	Mandrel	1
-	2050538463	Wrench	1

Motor items

- MR25-2800-KSL ATEX
- MR25-1300-KSL ATEX
- MR25-640-KSL ATEX
- MR25-290-KSL ATEX

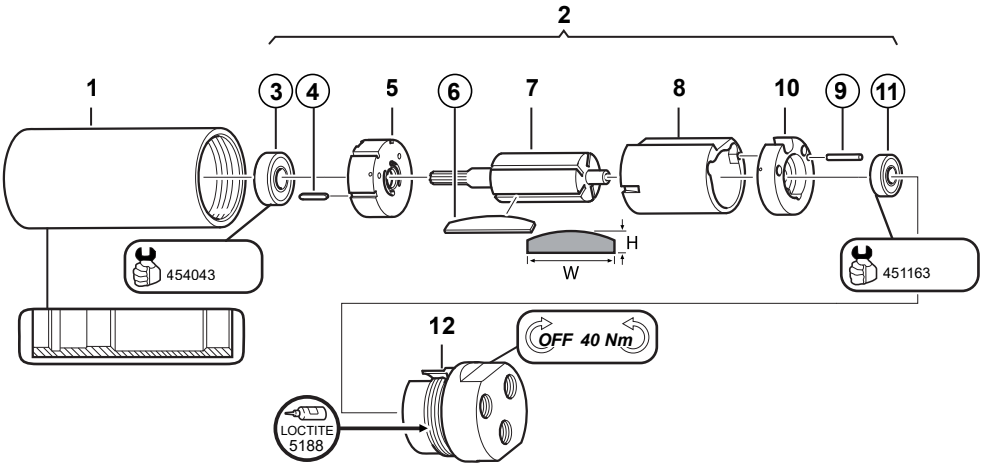

◯ = Included in service kit

Item	Part number	Description	Qty
1	2050536063	Casing	1
2	**2050537233**	**Motor, Compl.**	**1**
3	-	Ball Bearing	1
4	-	Key	1
5	2050536273	End Plate	1
6	-	Rotor Blade Kit	1
7	2050537873	Rotor	1
8	2050536173	Cylinder	1
9	-	Pin	1
10	2050536283	End Plate	1
11	-	Ball Bearing	1
12	2050535833	Back Head	1
-	451163	Mandrel	1
-	454043	Mandrel	1
-	2050538463	Wrench	1

Motor items

MR25-480-KSL ATEX

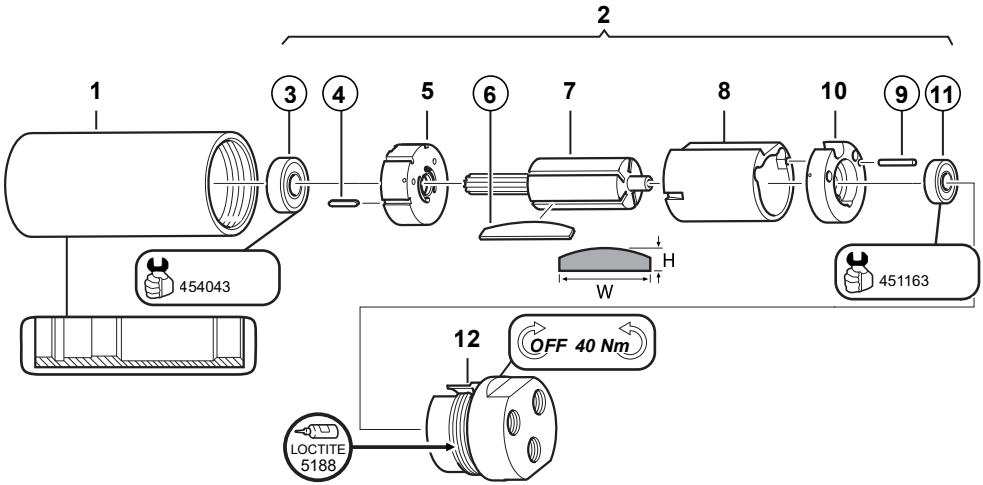

◯ = Included in service kit

Item	Part number	Description	Qty
1	2050536063	Casing	1
2	**2050537103**	**Motor, Compl.**	**1**
3	-	Ball Bearing	1
4	-	Key	1
5	2050536273	End Plate	1
6	-	Rotor Blade Kit	1
7	2050537883	Rotor	1
8	2050536173	Cylinder	1
9	-	Pin	1
10	2050536283	End Plate	1
11	-	Ball Bearing	1
12	2050535833	Back Head	1
-	451163	Mandrel	1
-	454043	Mandrel	1
-	2050538463	Wrench	1

CONTROL TOP COMPLETE

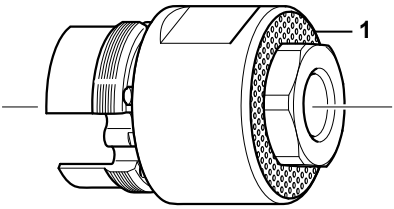

Item	Part number	Description	Qty
1	2050550233	Control Top Complete (M25-21500-KL ATEX, M25-4700-KL ATEX, , M25-2100-KL ATEX, M25-1040-KL ATEX, M25-770-KL ATEX, M25-480-KL ATEX, M25-180-KL ATEX, M25-21500-TL ATEX & M25-4700-TL ATEX)	1
1	2050550233	Control Top Complete (M25-3550-TL ATEX, M25-2100-TL ATEX, M25-1040-TL ATEX, M25-770-TL ATEX & M25-480-TL ATEX)	1

MOUNTING FLANGE

Mounting flange M25 KL/TL

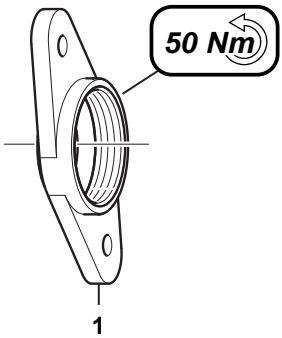

Item	Part number	Description	Qty
1	441653	Flange Adaptor (M25-21500-KL ATEX, M25-4700-KL ATEX, , M25-2100-KL ATEX, M25-1040-KL ATEX, M25-770-KL ATEX, M25-480-KL ATEX, M25-180-KL ATEX, M25-21500-TL ATEX & M25-4700-TL ATEX)	1
1	441653	Flange Adaptor (M25-3550-TL ATEX, M25-2100-TL ATEX, M25-1040-TL ATEX, M25-770-TL ATEX & M25-480-TL ATEX)	1

Mounting flange M25 KL/TL

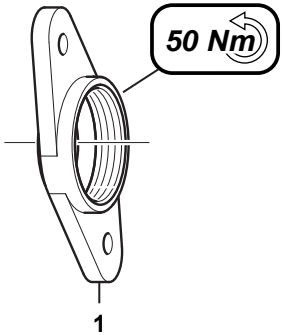

Item	Part number	Description	Qty
1	286423	Mounting Flange (M25-21500-KL ATEX, M25-4700-KL ATEX, , M25-2100-KL ATEX, M25-1040-KL ATEX, M25-770-KL ATEX, M25-480-KL ATEX, M25-180-KL ATEX, M25-21500-TL ATEX & M25-4700-TL ATEX)	1
1	286423	Mounting Flange (M25-3550-TL ATEX, M25-2100-TL ATEX, M25-1040-TL ATEX, M25-770-TL ATEX & M25-480-TL ATEX)	1

Mounting flange no hole M25/MR25 KL/TL

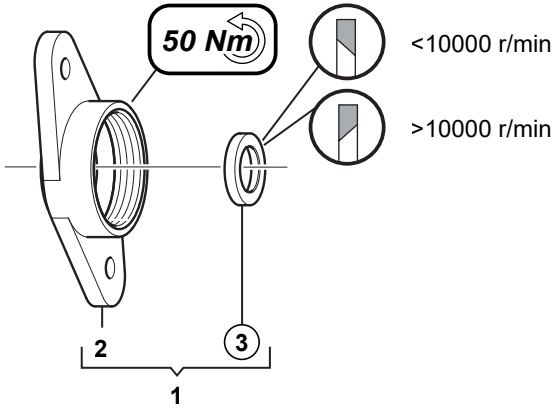

◯ = Included in service kit

Item	Part number	Description	Qty
1	**2050536393**	**Mounting Flange No Hole M25/MR25 KI/TI (M25-21500-KL ATEX, M25-4700-KL ATEX , , M25-2100-KL ATEX, M25-1040-KL ATEX, M25-770-KL ATEX, M25-480-KL ATEX, M25-180-KL ATEX, M25-21500-TL ATEX, M25-4700-TL ATEX, M25-3550-TL ATEX & M25-2100-TL ATEX)**	**1**
2	-	Flange	1
3	-	Seal Ring KI/TI	1
1	**2050536393**	**Mounting Flange No Hole M25/MR25 KI/TI (M25-1040-TL ATEX, M25-770-TL ATEX, M25-480-TL ATEX, MR25-13100-KL ATEX. MR25-2850-KL ATEX, MR25-2100-KL ATEX, MR25-1300-KL ATEX, MR25-640-KL ATEX, MR25-480-KL ATEX, MR25-290-KL ATEX & MR25-100-KL ATEX)**	**1**
2	-	Flange	1
3	-	Seal Ring KI/TI	1

Mounting flange with holes M25/MR25 KL/TL

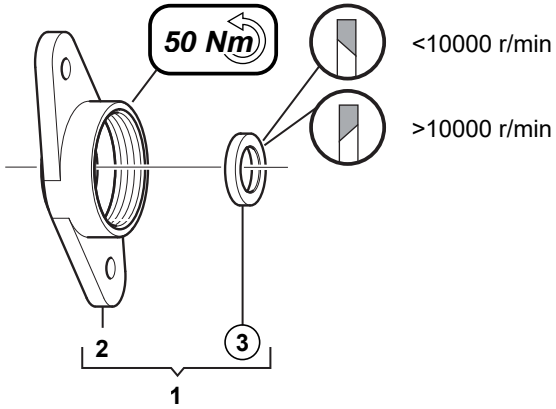

◯ = Included in service kit

Item	Part number	Description	Qty
1	**2050540623**	**Mounting Flange With Holes M25 (M25-21500-KL ATEX, M25-4700-KL ATEX, , M25-2100-KL ATEX, M25-1040-KL ATEX, M25-770-KL ATEX, M25-480-KL ATEX, M25-180-KL ATEX, M25-21500-TL ATEX, M25-4700-TL ATEX, M25-3550-TL ATEX & M25-2100-TL ATEX)**	**1**
2	-	Flange	1
3	-	Seal Ring Kl/Tl	1
1	**2050540623**	**Mmounting Flange With Holes M25 (M25-1040-TL ATEX, M25-770-TL ATEX, M25-480-TL ATEX, MR25-13100-KL ATEX, MR25-2850-KL ATEX, MR25-2100-KL ATEX, MR25-1300-KL ATEX, MR25-640-KL ATEX, MR25-480-KL ATEX, MR25-290-KL ATEX & MR25-100-KL ATEX)**	**1**
2	-	Flange	1
3	-	Seal Ring Kl/Tl	1

Mounting flange M25 / MR25 KSL

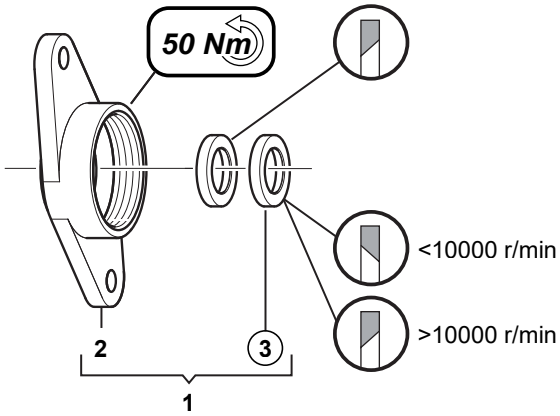

◯ = Included in service kit

Item	Part number	Description	Qty
1	**2050536443**	**Mounting Flange M25 / MR25 KSL (M25-19500-KSL ATEX, M25-4700-KSL ATEX, , M25-2100-KSL ATEX, , M25-770-KSL ATEX &)**	**1**
2	-	Flange	1
3	-	Seal Ring Ksl	2
1	**2050536443**	**Mounting Flange M25 / MR25 KSL (, MR25-2800-KSL ATEX, , MR25-1300-KSL ATEX, MR25-640-KSL ATEX, MR25-480-KSL ATEX & MR25-290-KSL ATEX)**	**1**
2		Flange	1
3	-	Seal Ring Ksl	2

FRONT NUT

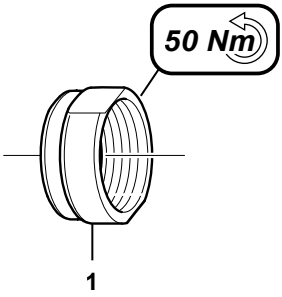

Item	Part number	Description	Qty
1	2050550243	Front Nut (M25-21500-KL ATEX, M25-4700-KL ATEX, , M25-2100-KL ATEX, M25-1040-KL ATEX, M25-770-KL ATEX, M25-480-KL ATEX, M25-180-KL ATEX, M25-21500-TL ATEX, M25-4700-TL ATEX, M25-3550-TL ATEX, M25-2100-TL ATEX, M25-1040-TL ATEX, M25-770-TL ATEX & M25-480-TL ATEX)	1
1	2050536543	Front Nut (MR25-13100-KL ATEX, MR25-2850-KL ATEX, MR25-2100-KL ATEX, MR25-1300-KL ATEX, MR25-640-KL ATEX MR25-480-KL ATEX, MR25-290-KL ATEX & MR25-100-KL ATEX)	1

MOUNTING FOOT

Mounting foot M25 / MR25 KL/TL

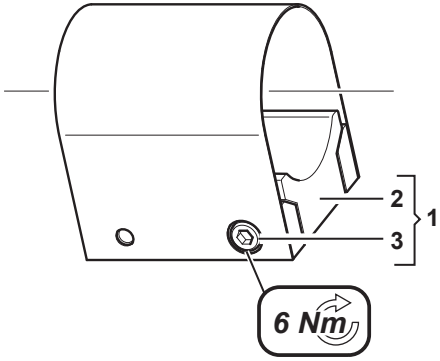

Item	Part number	Description	Qty
1	**2050536463**	**Mounting Foot M25 / MR25 Kl/Tl (M25-21500-KL ATEX, M25-4700-KL ATEX, , M25-2100-KL ATEX, M25-1040-KL ATEX, M25-770-KL ATEX, M25-480-KL ATEX, M25-180-KL ATEX, M25-21500-TL ATEX, M25-4700-TL ATEX, M25-3550-TL ATEX & M25-2100-TL ATEX)**	**1**
2	-	Foot	1
3	2050537943	Screw	1
1	**2050536463**	**Mounting Foot M25 / MR25 Kl/Tl (M25-1040-TL ATEX, M25-770-TL ATEX, M25-480-TL ATEX MR25-13100-KL ATEX, MR25-2850-KL ATEX, MR25-2100-KL ATEX, MR25-1300-KL ATEX, MR25-640-KL ATEX, MR25-480-KL ATEX, MR25-290-KL ATEX & MR25-100-KL ATEX)**	**1**
2	-	Foot	1
3	2050537943	Screw	1

Mounting foot M25 / MR25 KSL

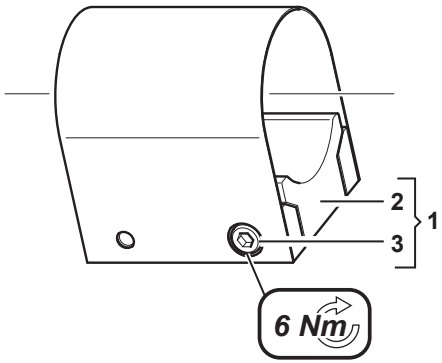

Item	Part number	Description	Qty
1	**2050536523**	**Mounting Foot M25 / MR25 KSL (M25-19500-KSL ATEX, M25-4700-KSL ATEX, , M25-2100-KSL ATEX, , M25-770-KSL ATEX, , , MR25-2800-KSL ATEX, , MR25-1300-KSL ATEX, MR25-640-KSL ATEX, MR25-480-KSL ATEX & MR25-290-KSL ATEX)**	**1**
2	-	Foot	1
3	2050537963	Screw	1

SERVICE KIT

Service kit - M25 Series

Item	Part number	Description	Qty
1	**2050538313**	**Service Kit M25 Series (M25-21500-KL ATEX, M25-4700-KL ATEX, , M25-2100-KL ATEX, M25-1040-KL ATEX, M25-770-KL ATEX, M25-480-KL ATEX, M25-180-KL ATEX, M25-21500-TL ATEX, M25-4700-TL ATEX, M25-3550-TL ATEX & M25-2100-TL ATEX)**	**1**
2	-	Ball Bearing	1
3	-	Ball Bearing	1
4	-	Pin	2
5	-	Pin	1
6	-	Rotor Blade Kit	5
7	-	Key	1
8	-	Seal Ring Kl/Tl	1
9	-	Seal Ring Ksl	2
10	-	Seal Ring	1
1	**2050538313**	**Service Kit M25 Series M25-1040-TL ATEX, M25-770-TL ATEX, M25-480-TL ATEX, MR25-13100-KL ATEX, MR25-2850-KL ATEX, MR25-2100-KL ATEX, MR25-1300-KL ATEX, MR25-640-KL ATEX, MR25-480-KL ATE, MR25-290-KL ATEX & MR25-100-KL ATEX)**	**1**
2	-	Ball Bearing	1
3	-	Ball Bearing	1
4	-	Pin	2
5	-	Pin	1
6	-	Rotor Blade Kit	5
7	-	Key	1
8	-	Seal Ring Kl/Tl	1
9	-	Seal Ring Ksl	2
10	-	Seal Ring	1

Service kit - M25 Series

Item	Part number	Description	Qty
1	**2050538313**	**Service Kit M25 Series (M25-19500-KSL ATEX, M25-4700-KSL ATEX, , M25-2100-KSL ATEX, , M25-770-KSL ATEX, MR25-2800-KSL ATEX, MR25-1300-KSL ATEX, MR25-640-KSL ATEX, MR25-480-KSL ATEX & MR25-290-KSL ATEX)**	**1**
2	-	Ball Bearing	1
3	-	Ball Bearing	1
4	-	Pin	2
5	-	Pin	1
6	-	Rotor Blade Kit	5
7	-	Key	1
8	-	Seal Ring Kl/Tl	1
9	-	Seal Ring Ksl	2
10	-	Seal Ring	1

SMALL PARTS KIT

Small parts kit - M25 Series

Item	Part number	Description	Qty
1	**6156870790**	**Small Parts Kit (M25-21500-KL ATEX, M25-4700-KL ATEX, , M25-2100-KL ATEX, M25-1040-KL ATEX, M25-770-KL ATEX, M25-480-KL ATEX, M25-180-KL ATEX, M25-21500-TL ATEX, M25-4700-TL ATEX, M25-3550-TL ATEX, M25-2100-TL ATEX, M25-1040-TL ATEX, M25-770-TL ATEX, M25-480-TL ATEX, MR25-13100-KL ATEX, MR25-2850-KL ATEX, MR25-2100-KL ATEX & MR25-1300-KL ATEX)**	**1**
2	-	O-Ring	1
3	-	Circlip	4
4	-	Key	1
5	-	Key	1
1	**6156870790**	**Small Parts Kit (MR25-640-KL ATEX, MR25-480-KL ATEX, MR25-290-KL ATEX, MR25-100-KL ATEX, M25-19500-KSL ATEX, M25-4700-KSL ATEX, , M25-2100-KSL ATEX, M25-770-KSL ATEX, MR25-2800-KSL ATEX, MR25-1300-KSL ATEX, MR25-640-KSL ATEX, MR25-480-KSL ATEX & MR25-290-KSL ATEX)**	**1**
2	-	O-Ring	1
3	-	Circlip	4
4	-	Key	1
5	-	Key	1

Chicago Pneumatic